661 Prima/Cyan Hinged Door 762

EX661–10

The codes here refer to the silver model. To ensure correct replacement parts are sent be ready to quote:

- The six digit part code from this drawing eg 304781
- The frame finish eg silver
- The unit size eg 762

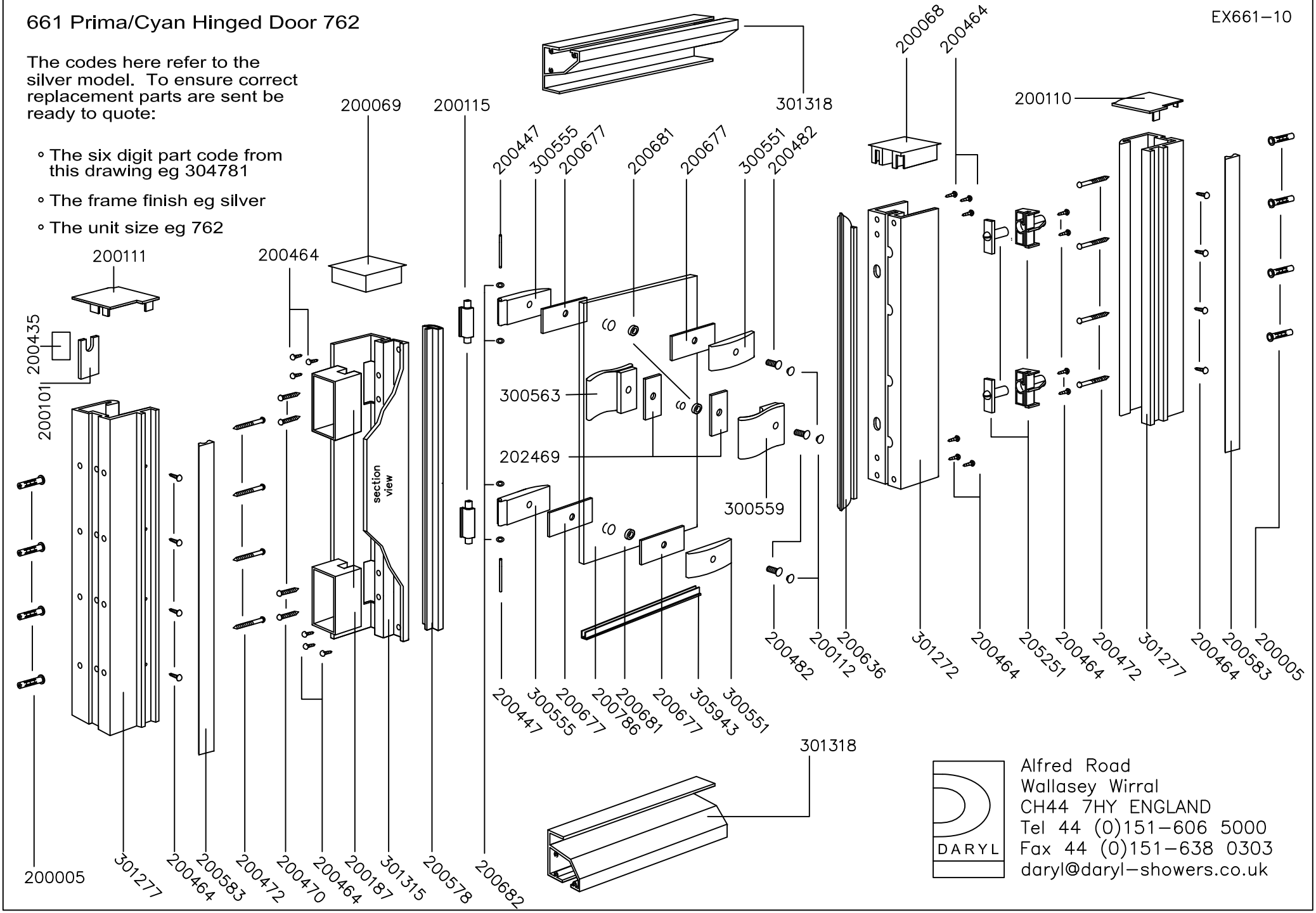

DARYL

Alfred Road
Wallasey Wirral
CH44 7HY ENGLAND
Tel 44 (0)151–606 5000
Fax 44 (0)151–638 0303
daryl@daryl–showers.co.uk