414 HYDRA CLASSIC REMOTE (R/H, SILVER)

EX414-9

To ensure correct replacement parts are sent be ready to quote the six digit part code from this drawing eg 206260

– 'PP' COMPONENTS ARE PACKED IN 404/414 PARTS PACK

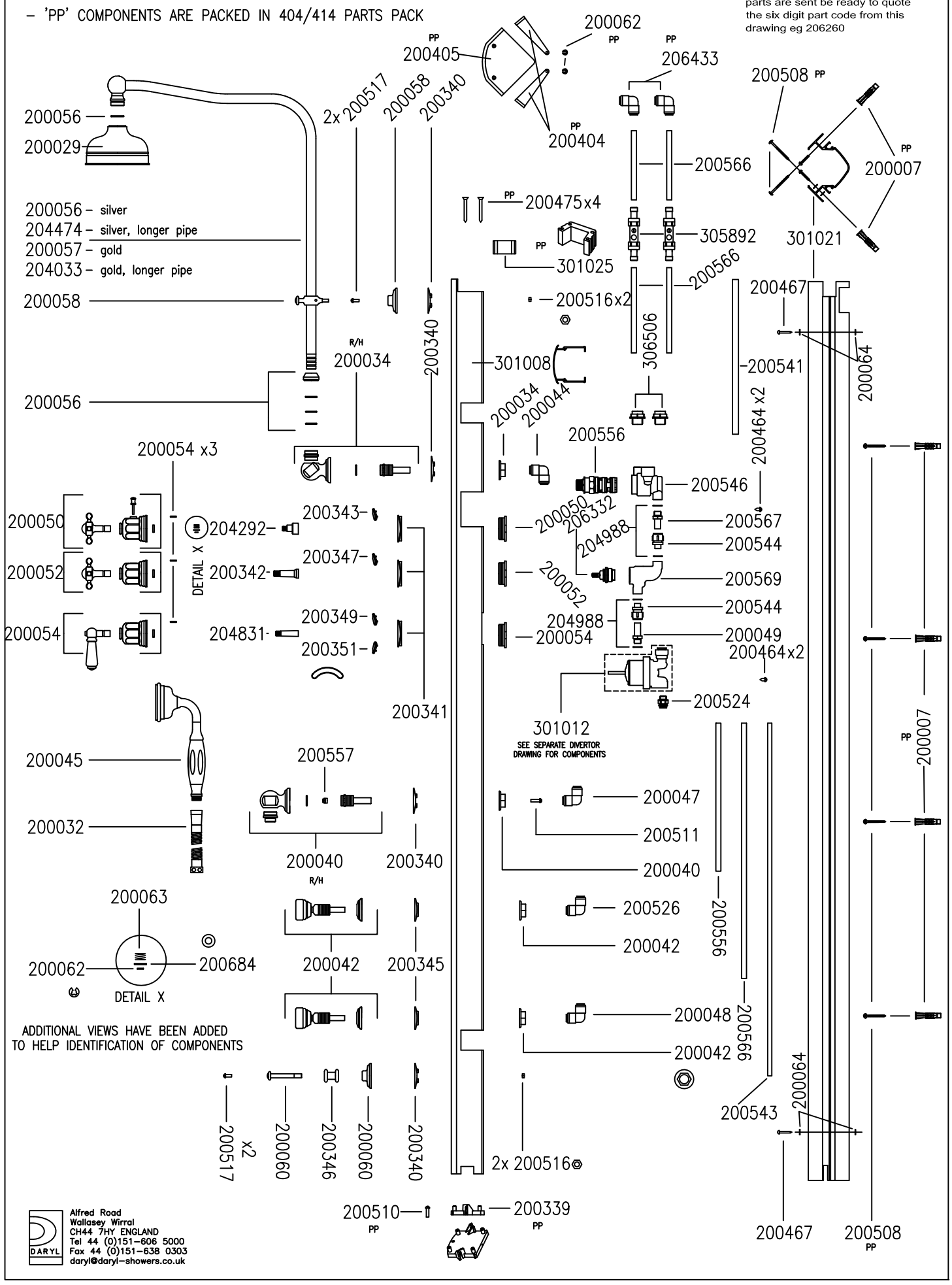

DARYL
Alfred Road
Wallasey Wirral
CH44 7HY ENGLAND
Tel 44 (0)151-606 5000
Fax 44 (0)151-638 0303
daryl@daryl-showers.co.uk