# 222 ARCADIA / HYDRACADIA PENTA
# RIGHT HAND PANEL

EX222-3

'PP' COMPONENTS ARE PACKED IN 263 PARTS PACK

To ensure correct replacement parts are sent be ready to quote the six digit code from this drawing eg 205352

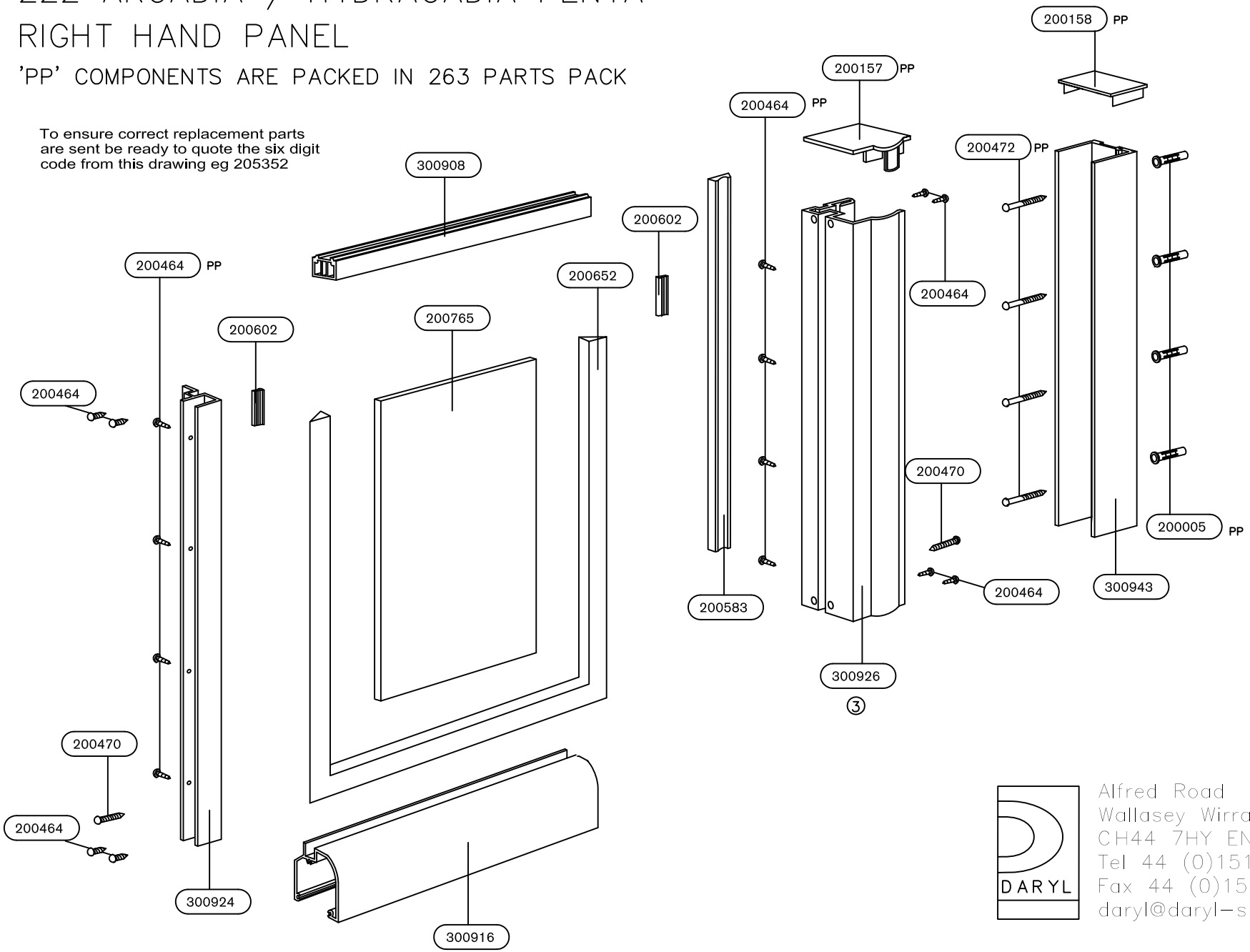



DARYL

Alfred Road
Wallasey Wirral
CH44 7HY ENGLAND
Tel 44 (0)151-606 5000
Fax 44 (0)151-638 0303
daryl@daryl-showers.co.uk